FEMALE END VIEW

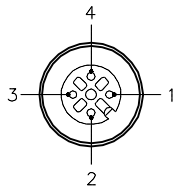

1 = BROWN
2 = WHITE
3 = BLUE
4 = BLACK

MALE END VIEW

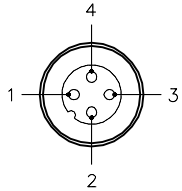

1 = BROWN
2 = WHITE
3 = BLUE
4 = BLACK

WIRING DIAGRAM

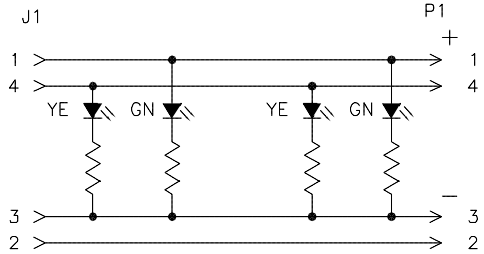

1 = VOLTAGE (+) (GREEN)
2 = OUTPUT
3 = COMMON (−)
4 = OUTPUT (YELLOW)

SPECIFICATIONS

CONTACT CARRIER MATERIAL	NYLON OR TPU
MOLDED HEAD MATERIAL/COLOR	TPU/CLEAR
CONTACT MATERIAL/PLATING	BRASS/GOLD
COUPLING NUT MATERIAL/PLATING	BRASS/NICKEL
RATED CURRENT [A]	4.0 A
RATED VOLTAGE [V]	10−30 VDC
OUTER CABLE JACKET MATERIAL/COLOR	PVC/GRAY
CONDUCTOR INSULATION MATERIAL	PVC
NUMBER OF CONDUCTORS [AWG]	4x22 AWG
TEMPERATURE RANGE	−40°C to +105°C (−40°F to +221°F)
PROTECTION CLASS	MEETS NEMA 1,3,4,6P AND IEC IP68

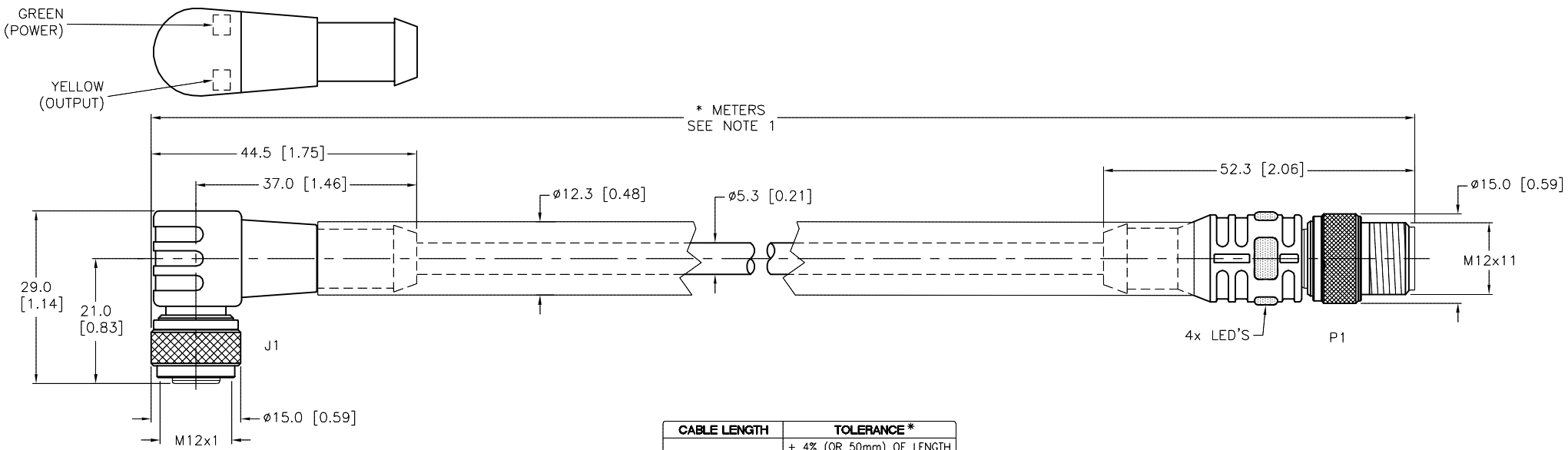

CABLE LENGTH	TOLERANCE *
ALL LENGTHS	+ 4% (OR 50mm) OF LENGTH − 0% (OR 0mm) OF LENGTH WHICHEVER IS GREATER
STRIP LENGTH	**TOLERANCE ***
0−7mm	±0.5mm
8−29mm	±1.0mm
30−49mm	±2.0mm
50−69mm	±3.0mm
70−100mm	±4.0mm
OVER 100mm	±5.0mm
* UNLESS OTHERWISE SPECIFIED	

NOTES:

1. "*" INDICATES CABLE LENGTH IN METERS. CONTACT TURCK TO ORDER SPECIFIC LENGTHS.

2. "/S1077" DESIGNATES SILICONE TUBING PLACED OVER CABLE JACKET. TUBING TO BE ASSEMBLED OVER CABLE JACKET PRIOR TO SOLDERING/CRIMPING ENDS & MAXIMUM LENGTH OF 4 METERS; MINIMUM LENGTH OF 0.5 METERS ON EXTENSIONS. (CONTACT MFG TO VERIFY SHORTER/LONGER LENGTHS).

3. "/SV" DESIGNATES SPECIAL PACKAGING FOR VENDING MACHINES.

4. MAX. LENGTH FOR VENDING MACHINE: 0.5 METERS.

SOURCE DRAWING - FOR REFERENCE ONLY

REV	DESCRIPTION	BY	DATE	ECO NO.
B	UPDATE LED REPRESENTATION	RDS	03/21/18	64732

RELATED DOCUMENTS
1.
2.
3.
4.

3RD ANGLE PROJECTION

THIS DRAWING IS CONFIDENTIAL AND THE PROPERTY OF TURCK INC. USE OF THIS DOCUMENT WITHOUT WRITTEN PERMISSION IS PROHIBITED.

TURCK

3000 CAMPUS DRIVE
MINNEAPOLIS, MN 55441
1−800−544−7769
(763) 553−7300
(763) 553−0708 fax
www.turck.us

MATERIAL: SEE SPECIFICATIONS

FINISH: SEE SPECIFICATIONS

ALL DIMENSIONS DISPLAYED ON THIS DRAWING ARE FOR REFERENCE ONLY

CONTACT TURCK FOR MORE INFORMATION

DRFT: RDS | DATE: 11/05/13
APVD: T.S. | SCALE: 1=1.0

UNIT OF MEASUREMENT
MILLIMETER [INCH]
DO NOT SCALE THIS DRAWING

DESCRIPTION: WK 4.4T−*−P7X2−RSE 4.4T−P7X2/S1077/SV

IDENTIFICATION NO.

REV: B

FILE: 777032505 | SHEET 1 OF 1

Approved 03/21/2018, work order #159648 by T.V.